*Designed as a middle section of multiple pumps group 222A(C)..../...X156/...*

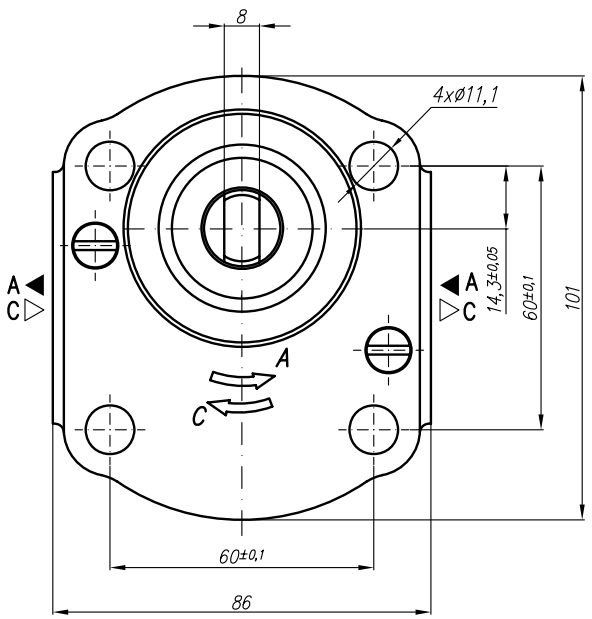


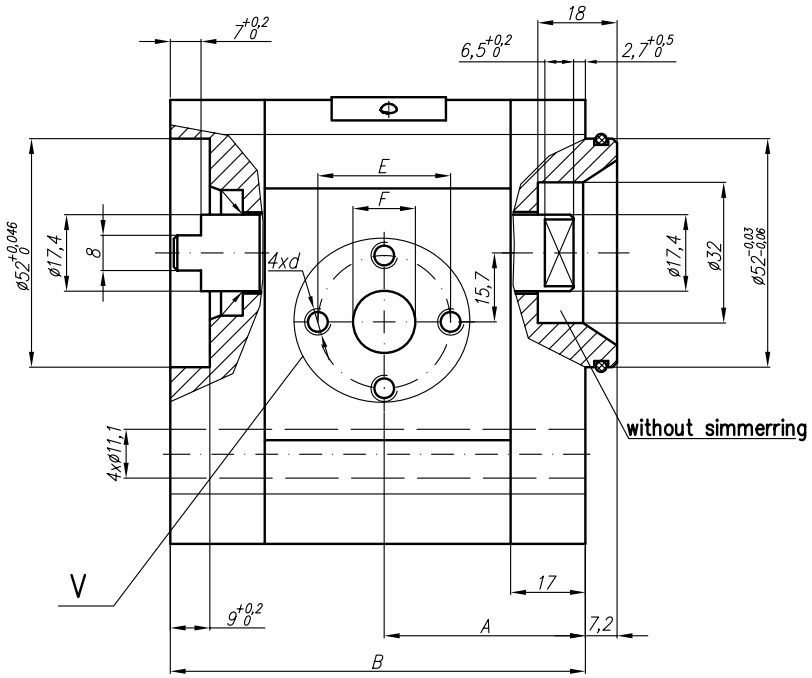


V
Variants for ports – M;G;U

Designations:

...X156 – Normal version (flanges);
...X156M – Metric threads;
...X156G – GAS threads;
...X156U – SAE threads;

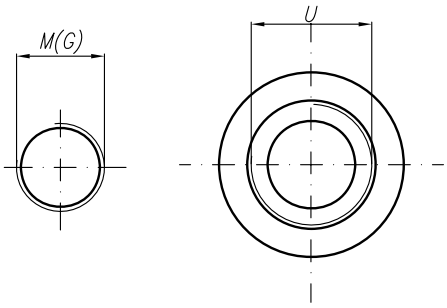


SAE J475 (ISO R725)

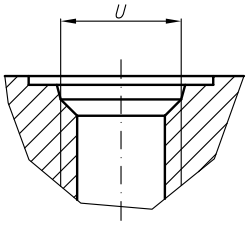


| Type | Displacement | Flow | | Pressure | max Speed | Dimension | | | | | | | | | | | | | | | |
|---|---|---|---|---|---|---|---|---|---|---|---|---|---|---|---|---|---|---|---|---|---|
| | | at 1500 rpm | at max rpm | $P_{nom}$ | n | A | B | Inlet | | | | | | Outlet | | | | | |
| | $cm^3$/rev | l/min | l/min | bar | rpm | mm | mm | E | F | d | M | G | U | E | F | d | M | G | U |
| 20A(C)4,5X156... | 4,5 | 6,14 | 14,33 | 250 | 3500 | 40,5 | 85,2 | 30,2 | 13,1 | M6-6H | M20x1,5 | G1/2 | 1 1/16"-12UNF | 30,2 | 13,1 | M6-6H | M16x1,5 | G1/2 | 7/8"-14UNF |
| 20A(C)6,3X156... | 6,3 | 8,69 | 20,29 | 250 | 3500 | 42 | 88,2 | | | | | | | | | | | | |
| 20A(C)8,2X156... | 8,2 | 11,32 | 26,40 | 250 | 3500 | 43,5 | 91,1 | | | | | | | | | | | | |
| 20A(C)10X156... | 10 | 13,95 | 32,55 | 250 | 3500 | 45 | 94,1 | 39,7 | 19 | M8-6H | | G3/4 | | | 14,2 | | | | |
| 20A(C)11X156... | 11,3 | 15,76 | 36,78 | 250 | 3500 | 46 | 96,2 | | | | | | | | | | | | |
| 20A(C)12X156... | 12 | 16,92 | 39,48 | 250 | 3500 | 46,6 | 97,5 | | | | | | | | | | | | |
| 20A(C)14X156... | 14 | 19,95 | 46,55 | 250 | 3500 | 48 | 100,6 | | | | | | | | | | | | |
| 20A(C)15X156... | 15 | 21,60 | 36,00 | 250 | 2500 | 49 | 102,1 | | | | | | | | | | | | |
| 20A(C)16X156... | 16 | 23,04 | 38,40 | 250 | 2500 | 50 | 103,8 | | | | | | | | | | M20x1,5 | | |
| 20A(C)19X156... | 19 | 27,36 | 45,60 | 200 | 2500 | 52 | 108,7 | | | | | | | | | | | | |
| 20A(C)22X156... | 22 | 31,68 | 42,24 | 180 | 2000 | 55 | 113,7 | | | | | | | | | | | | |
| 20A(C)25X156... | 25 | 36,00 | 48,00 | 160 | 2000 | 57,2 | 118,5 | | | | | | | 39,7 | 19 | M8 | | | |